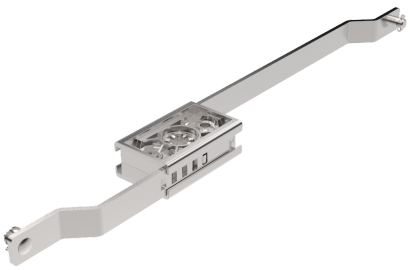

VISION INSIDE CLASSIC

The system is mounted/installed inside the sealing area. When closing the swing handle, the upper flat rod moves upwards and the lower rod moves downwards. For three-point locking, a standard cam can be used on the control mechanism with an adapter. Note that our latching rods fit both control mechanisms with E-clips and Quick-fit connectors. The flat rods are ordered separately.

COMP

MATERIAL
Control mechanism: Zinc die cast, zinc plated, special surface treatment (passes 30 day salt-spray test according to ISO 9227, equivalent to ASTM B 117) or glass fibre reinforced polyamide (PA6GF30)
Rod: Steel, zinc plated

RELATED PRODUCTS
Handles: 1-002.02, 1-005.10, 1-006.50, 1-002.01, 6-010, 1-002.03, 1-006.01, 1-006.03, 1-007, 1-002.08
Needed components for a complete system: 1-008.57
Cams: 2-481
Accessories: 1-008.13
Use the Index Code at industrilas.com

TECHNICAL INFORMATION
Flat rods are available on request only.

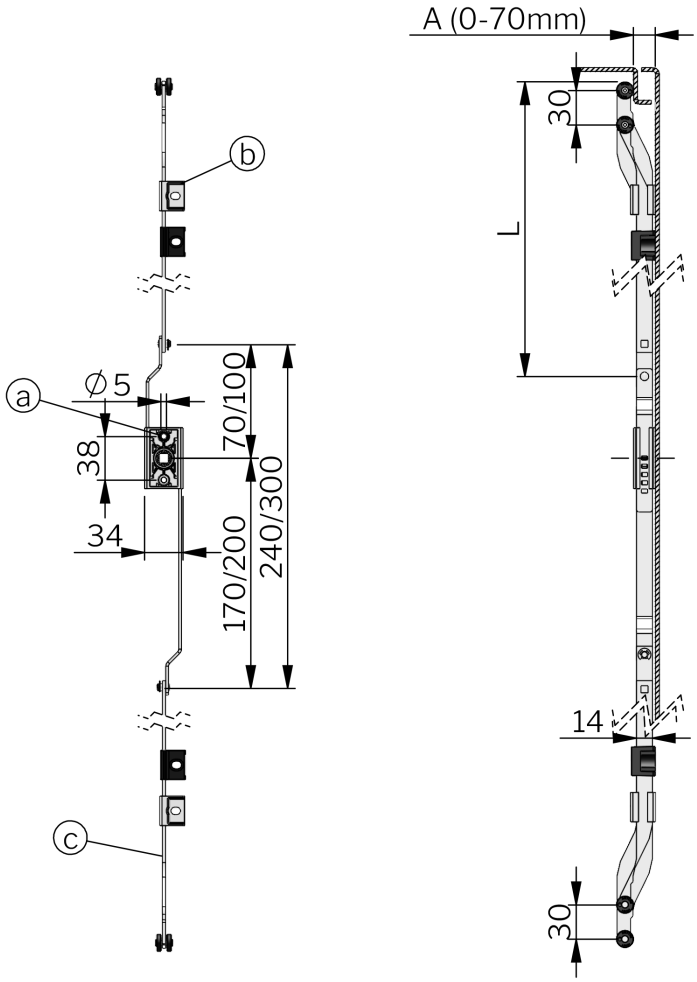

Industrilås
When access counts

Index Code: 1-008.21

P/N	Description	Material	Drawing
131103	Dual action control mechanism - with Quick-fit connectors	Zinc die cast, zinc plated	A
131116	Dual action control mechanism - connection with E-clips	Zinc die cast, zinc plated	A
131403	Dual action control mechanism - with Quick-fit connectors	Zinc with surface treatment "Highlander"	A
131416	Dual action control mechanism - connection with E-clips	Zinc with surface treatment "Highlander"	A
135003	Dual action control mechanism - with Quick-fit connectors	Glass fibre reinforced polyamide (PA6GF30)	A
135016	Dual action control mechanism - connection with E-clips	Glass fibre reinforced polyamide (PA6GF30)	A
282170-AA-LLLL	Flat rod	Steel, zinc plated	C